699

VENNER

ELECTRONICS LTD.

633

MILLISECOND STOPCLOCK Type TSA1014/A. (Formerly type TSA4). Instructions.

VENNER ELECTRONICS LIMITED,
Kingston By-Pass,
New Malden,
Surrey, ENGLAND.

DRO/JV/6/58.
Revised NLA/AP/PD/4/60.

CONTENTS

		Page.
1.	INTRODUCTION.	3
2.	TECHNICAL SUMMARY.	3
2.1	Power supplies.	3
2.2	Range.	3
2.3	Accuracy.	3
2.4	Trigger Input.	3
2.5	Weight and Dimensions.	3
3.	DESCRIPTION OF EQUIPMENT.	3-8
3.1	Equipment List.	3-4
3.2	Mechanical Description.	4
3.3	Description of Operation.	4-8
3.3.1	Power Supply.	4-5
3.3.2	Counting Chain.	5
3.3.3.	TS5 Switching (OPERATION switch at A)	5-6
3.3.4	Gate Switching(OPERATION switch at B)	6-7
3.3.5	Reset.	7-8
4.	SETTING UP.	8-9
4.1	Power Supply.	8
4.2	Meter Adjustments.	8
4.3	Oscillator Frequency Adjustment.	9
5.	OPERATING INSTRUCTIONS.	9-14
5.1	General.	9
5.1.1.	Connexions to Timed Contacts.	9
5.1.2.	Accuracy.	9-10
5.1.3.	OPERATION Switch.	10
5.2	OPERATION Switch at A.	10-12
5.2.1.	Closure time of normally open contacts.	10-11
5.2.2.	Open time of normally closed contacts.	11
5.2.3.	Interval between closing of two pairs of open contacts.	11-12
5.2.4.	Interval between opening of two pairs of closed contacts.	12
5.3	OPERATION Switch at B.	12-13
5.3.1	Interval between the momentary closure of two pairs of contacts.	12
5.3.2	Natural frequency of a vibrating pair of contacts.	12
5.3.3	Interval between two positive going pulses.	13
5.4	Operation Time of a Relay.	13-14

CONTENTS

1. INTRODUCTION.

2. TECHNICAL SUMMARY.
   - 2.1 Power supplies.
   - 2.2 Range.
   - 2.3 Accuracy.
   - 2.4 Trigger Input.
   - 2.5 Weight and Dimensions.

3. DESCRIPTION OF EQUIPMENT.
   - 3.1 Equipment Line.
   - 3.2 Mechanical Description.
   - 3.3 Description of Operation.
     - 3.3.1 Power Supply.
     - 3.3.2 Counting Chain.
     - 3.3.3. TS5 Switching (OPERATION switch at A)
     - 3.3.4 Gate Switching(OPERATION switch at B)
     - 3.3.5 Reset.

4. SETTING UP.
   - 4.1 Power Supply.
   - 4.2 Meter Adjustments.
   - 4.3 Oscillator Frequency Adjustment.

5. OPERATING INSTRUCTIONS.
   - 5.1 General.
     - 5.1.1. Connexions to Timed Contacts.
     - 5.1.2. Accuracy.
     - 5.1.3. OPERATION Switch.
   - 5.2 OPERATION Switch at A.
     - 5.2.1. Closure time of normally open contacts.
     - 5.2.2. Open time of normally closed contacts.
     - 5.2.3. Interval between closing of two pairs of open contacts.
     - 5.2.4. Interval between opening of two pairs of closed contacts.
   - 5.3 OPERATION Switch at B.
     - 5.3.1 Interval between the momentary closure of two pairs of contacts.
     - 5.3.2 Natural frequency of a vibrating pair of contacts.
     - 5.3.3 Interval between two positive going pulses.
   - 5.4 Operation Time of a Relay.

ILLUSTRATIONS.

	Drawing No.
Wiring Diagram	S31/8/1.
Block Diagram	ES32/48.

MILLISECOND STOPCLOCK type TSA1014/A.

1. INTRODUCTION.

The Millisecond Stopclock type TSA1014/A is a time measuring equipment with a range of 0.1mS to approximately 27.8 hours. Most common applications are contact timing, relay or microswitch testing, or period measurement.

2. TECHNICAL SUMMARY.

2.1. Power Supplies.

200 - 250 volt, 50 c/s Mains, or, 12 volt d.c. 120mA.

2.2. Range.

0.1mS to 99,999 seconds (approximately 27.8 hours).

2.3. Accuracy.

Maximum error = Count tolerance + crystal stability.

Count tolerance = $\pm$ 0.1mS.

Crystal stability = 3 parts/million from 15°C to 25°C.
5 parts/thousand from -10°C to 40°C.

2.4. Trigger Input (on Pulse Input).

Positive-going.

Amplitude : 6-250 volts peak.

Rise time : 6V pulse : Less than 15 microSeconds.
15V pulse : Less than 30 microSeconds.

Input impedance : Approximately 300 kilohms shunted by 60pF.

2.5. Weight and Dimensions.

Length.	Width.	Depth.	Weight.
16½" (41.9cm)	9" (22.9cm).	7½" (19.1 cm).	21 lbs. (9.53kg)

3. DESCRIPTION OF EQUIPMENT.

3.1. Equipment List.

MILLISECOND STOPCLOCK type TSA1014/A.

1. INTRODUCTION.

The Millisecond Stopclock type TSA1014/A is a time measuring equipment with a range of 0.1mS to approximately 27.8 hours. Most common applications are contact timing, relay or microswitch testing, or period measurement.

2. TECHNICAL SUMMARY.

2.1 Power Supplies.

200 - 250 volt, 50 c/s Mains, or, 12 volt d.c. 120mA.

2.2. Ranges.

0.1mS to 99,999 seconds (approximately 27.8 hours).

2.3. Accuracy.

Maximum error = Count tolerance + crystal stability.

Count tolerance = $\pm$ 0.1mS.

Crystal stability = 3 parts/million from 15°C to 25°C.
5 parts/thousand from -10°C to 40°C.

2.4. Trigger Input (on Pulse Input).

Positive-going.

Amplitude : 6-250 volts peak.

Rise time : 6V pulse : Less than 15 microSeconds.
15V pulse : Less than 30 microSeconds.

Input impedance : Approximately 300 kilohms shunted by 60pF.

2.5. Weight and Dimensions.

Length.	Width.	Depth.	Weight.
16½" (41.9cm)	9" (22.9cm).	7½" (19.1 cm).	21 lbs. (9.53kg)

3. DESCRIPTION OF EQUIPMENT.

3.1. Equipment List.

The equipment consists of the following Venner plug-in stages, mounted and wired into the chassis.

	Qty.
Binary Unit type TS2B.	2.
10 kc/s Crystal Oscillator type TS5.	1.
Cyclo Counter type TS8.	1.
Decade Counter type TS10 or TS10/5.	4.
Universal Gate type TS16	1.
Power Unit type TS20C.	1.

3.2. Mechanical Description.

The equipment is fully portable, and is mounted in a case with a protective lid. For greater accessibility in use, the lid may be slid from its hinges. Four screws along the sides of the front panel hold the unit in its case.

On the front panel are mounted the four meters and the cyclo counter dial, all the operating and meter setting controls, the power supply sockets, OFF/BATTERY/MAINS switch, and the three input terminals.

The TS20C is mounted to the right of the chassis, looking over the front panel, and the potentiometer voltage control is accessible from the rear. Mounted on the left of the TS20C, and secured below a clamp are, the TS16 at the rear, and two TS2B's to the front. To the left of these and secured by a clamp are, front to rear, the four TS10's and the TS5. The TS8 is mounted horizontally with the dial showing through the front panel The first TS10 in the divider chain, controlling the 0.1-10 mS meter, is nearest the TS5.

Fuse FS1 is in the top right-hand corner of the front panel, while variable capacitor C1 is near the 12V input socket and accessible below the chassis.

3.3. Description of Operation.

3.3.1. Power Supply. (see also Page 8A).

The 12V d.c. power supply is connected through a bridge

rectifier MR1 to ensure that the correct polarity supply to the plug-in stages is maintained if the battery connexions are reversed. The positive pole of the input is earthed through fuse FS1.

3.3.2. Counting Chain.

Crystal Oscillator TS5 is tuned at the works by variable capacitor C1 to exactly 10 kc/s. While the clock is running, a trapezoidal waveform of approximately 7.5V peak-to-peak aplitude is applied to a chain of decade counters TS10.

Each TS10 delivers to the succeeding TS10, through pin 1, one positive-going carry pulse for every ten pulses received; while pin 2 carries a staircase waveform whose level is dependent upon the count of pulses received since the last carry pulse was delivered from pin 1. A meter graduated 0-9 is connected to pin 2 of each TS10 to record the number of pulses received since the clock began to run; the first meter reading 0 - 0.9mS, the second 0 - 9mS, the third 0 - 90mS, and the fourth 0 - 0.9 seconds. The fourth TS10 delivers one carry pulse to the cyclo counter TS8 every second, and so this unit records the number of complete seconds, from 0 to 9,999, elapsed since the clock began to run.

3.3.3. TS5 Switching (OPERATION switch at A).

With the OPERATION switch at A, simple electrical gating of the TS5 is employed.

The TS5 consists of a crystal oscillator and an emitter follower, with the emitter follower circuit connected to allow two switching systems.

For the 10 kc/s output of the oscillator to be fed out of the TS5:-

(1) Pin 5 of the TS5, which is switched to input terminal 1, must be connected to earth, i.e. input terminal E.

(2) Pin 4 of the TS5, which is switched to input terminal 2, must be open circuited from earth, i.e. input terminal E.

The clock therefore records the time for which these two conditions are fulfilled.

3.3.4. Gate Switching. (OPERATION switch at B)

All voltage figures given in the following description are for a battery supply of 12V D.C.

With the OPERATION switch at B an electronic gating system is employed. The crystal oscillator output is fed continuously from the TS5, but is connected to the counter chain through universal gate TS16. The clock therefore runs while the TS16 gate is open.

The action of the gate is controlled by the two binary units TS2B. If a positive-going pulse is applied to terminal 1 with the gate closed, or terminal 1 is momentarily earthed (which has the same effect as, with the OPERATION switch at B, there are potentials of -5 volts from 40 kΩ impedance on terminals 1 and 2), the first TS2B switches over. Pin 4 of

the second TS2B is then lifted from -9V to -5V so that the second TS2B also switches over, raising Pin 8 of the universal gate TS16 from -9V to -5V. The TS16 gate then opens to allow pulses to pass from the TS5 to the counting chain. The clock runs until a positive-going pulse is applied through terminal 2 to pin 6 of the second TS2B. The switching input to the TS16 is then driven from -5V to -9V, and no more pulses are received by the counter chain. The clock reading then shows the interval between the two pulses.

Further input pulses at terminal 1 are ineffective until the TS2B's are reset to zero by means of the RESET ZERO lever, as the first binary unit TS2B is already in the 1 condition. The clock reading is therefore retained until the lever is operated. Similarly, stop pulses received at terminal 2 before the start pulse do not affect the action as the second binary unit is in the '0' condition and is therefore unaffected by positive-going pulses on pin 6.

Limiting networks are included in the input circuits of the TS2B to allow correct triggering of the units by input pulses in the range 6 to 250 volts peak amplitude.

3.3.5. Reset.

To reset the meters to 0, the lever on the TS8 beneath the cyclo counter dial must be pressed down. The dial reading then returns to zero and contacts open inside the TS8 to open circuit the reset 0 pins of the TS10's and TS2B's

from earth. The four meters take up zero readings, and the gate circuit is closed in readiness for pulse switching.

When the RESET NINE button is depressed, pins 5 of the TS10's are open circuited from earth, and the four meters show full scale deflexion. When the button is released, the meter pointers fall back to 9.

4. SETTING UP.

4.1. Power Supply.

The 12V D.C. supply required by the equipment may be obtained from either dry batteries or accumulators, but accumulators are preferred because of their constant voltage characteristic. The supply may be connected to the two lower pins of the 12V D.C. socket in either polarity, as a bridge rectifier circuit is included to ensure that the feed to the transistors is always correct. Care must be taken, however, to ensure that there is no connexion between either side of the battery and the chassis of the equipment as this would cause heavy current to be passed by the rectifier. For example, if a car battery is used, there must be no connexion between the car chassis and the TSA1014/A case.

4.2. Meter Adjustments.

Each meter is adjusted by means of the SET ZERO and SET NINE controls directly beneath it. With the counters not operating, depress and release the RESET ZERO lever on the cyclo counter dial, and set the four meters pointers to zero by means of the four SET ZERO controls. Press and release the RESET NINE button, and adjust the meter pointer to 9 by means of the SET NINE controls. Recheck the zero setting by momentarily depressing the RESET ZERO lever.

Section 4. Setting Up. (page 8A)

4.1.(A) Power Supply.

The mains plug secured in the right-hand lower corner of the front panel is wired thus; top pin C is Earth, right-hand lower pin (viewed from the front) is Live, and the left-hand lower pin is Neutral.

When the "SUPPLY" switch is in the "MAINS" position, the bridge rectifier circuit is disconnected and the output of the TS20C is switched, in the positive line, to the fuse and the plug-in stages.

The adjustment of the stabilized output voltage is made by rotating the preset potentiometer control mounted on the side panel of the TS20C. A voltmeter connected to pin 3 (negative) and pin 7 (positive) of any of the plug-in units will indicate the output voltage of the TS20C.

4.3. Oscillator Frequency Adjustment.

Variable capacitor C1, the oscillator frequency control, is set carefully at the factory to give an output of exactly 10 kc/s. On no account should any attempt be made to reset it unless the crystal oscillator stage TS5 is replaced. The output frequency must then be checked against an extremely accurate frequency source if the accuracy of the TSA1014/A is to be maintained; in Great Britain a suitably accurate method is to beat the 20th harmonic of the TS5 output with the B.B.C. Light Programme carrier on 1500 metres.

5. OPERATING INSTRUCTIONS.

5.1. General.

5.1.1. Connexions to Timed Contacts.

When the Millisecond Stopclock is used to measure the closed or open times of contacts, care must be taken to ensure that there is no voltage present. Also, the contacts must not be connected to any component, such as a resistor or capacitive circuit, or contactor coil, which may cause false readings. A suppression circuit employing a capacitor fitted across the contacts may prevent the Millisecond Stopclock from operating.

5.1.2. Accuracy.

Because the crystal has a frequency tolerance of three parts per million over the range 15°C to 25°C, some of the decimal place readings of long time intervals may be inaccurate. Within that temperature range, therefore, the

reading shown by the clock is accurate to the first five significant figures; the switch is within three of the correct figures; and the remaining figures are inaccurate. At temperatures outside the range 15°C - 25°C, extra allowance must be made for crystal frequency drift.

5.1.3. OPERATION Switch.

With the OPERATION switch at A, the clock runs for the period for which terminals 1 and E are short circuited and terminals 2 and E are open circuited. With the switch at B, the clock measures the interval between a positive-going pulse of 6-250 volts peak amplitude, or a momentary earth at terminal 1, and a similar pulse or momentary earth at terminal 2. Using these principles, many different types of measurement may be made. Detailed instructions for carrying out some of these are given below.

5.2. OPERATION switch at A.

5.2.1. Closure time of normally open contacts.

Connect the contacts to terminals 1 and E. Press and release the RESET ZERO lever. The clock will commence to run when the relay contacts close and will stop when they open. The cyclometer counter will then indicate the number of complete seconds, and the meters will show to four decimal places the fraction of a second for which the contacts were closed.

Where it is required to find the interval between one pair of contacts closing and another pair opening, the two pairs must be connected in series between terminals 1 and E, and the counter and meters returned to zero by means of the RESET ZERO lever. The clock will then run for the period over which both sets of contacts are closed.

5.2.2. Open time of normally closed contacts.

Link terminals 1 and E and connect the contacts to terminals 2 and E. Press and release the RESET ZERO lever. The clock will run for the period for which the contacts are open.

To find the interval between a pair of contacts opening and another pair closing, connect the two pairs of contacts in parallel between terminals 2 and E. Link terminals 1 and E, and reset the clock reading to zero. The clock will then run for the period for which the path through the two sets of contacts is broken.

To determine the changeover time of a switch or a set of contacts, connect the two outer contacts to terminal E and the centre contact to terminal 2. Link terminals 1 and E and reset the clock reading to zero. The clock will then run for the interval between breaking and making.

5.2.3. Interval between closing of two pairs of open contacts.

Connect the pair of contacts closing first between terminals 1 and E, and the other pair between terminals 2 and E.

Press and release the RESET ZERO lever. The clock will start when the first pair of contacts close, and stop when the second pair close.

5.2.4. Interval between opening of two pairs of closed contacts.

Connect the pair of contacts opening first between terminals 2 and E, and the other pair between terminals 1 and E. Press and release the RESET ZERO lever. The clock will start when the first pair of contacts open, and stop when the second pair open.

5.3. OPERATION switch at B.

5.3.1. Interval between the momentary closure of two pairs of contacts.

To measure the interval between the momentary, or continuous, closure of one pair of contacts and the momentary or continuous closure of another pair, connect the first pair to close between terminals 1 and E and the second pair between terminals 2 and E. Depress and release the RESET ZERO lever. The clock will then record the interval between the closing of the two pairs of contacts.

5.3.2. Natural frequency of a vibrating pair of contacts.

To measure the contact bounce or the natural frequency of a vibrating pair of contacts, join terminals 1 and 2 together and connect the contacts between them and terminal E. Press and release the RESET ZERO lever. The clock will then run between the first and second closure of the contacts.

5.3.3. Interval between two positive-going pulses.

When the two positive-going pulses are from independent sources, connect one source to terminals 1 and E and the second to terminals 2 and E. The first pulse received at terminal 1 after resetting will start the clock, and the first pulse received at terminal 2 will stop it. Further pulses are ineffective.

When the pulses are from the same source, join terminals 1 and 2 together and connect the source between them and terminal E. Depress and release the RESET ZERO lever. The clock will then run between the first and second pulses.

5.4. Operation time of a relay.

There are several alternative methods of discovering the operating time of a relay. For the simplest of these, the OPERATION switch must be put to A and the relay connected with one half of a double-pole switch in series with the contactor coil and the energising supply. The other half of the switch must be connected between terminals 1 and E, and the normally open relay contacts between terminals 2 and E of the Millisecond Stopclock. Press and release the RESET ZERO lever, and close the double pole switch. The clock will start when the switch makes and stop when the relay contacts close.

The result given by the method above may be slightly inaccurate,- as it is unlikely that the two poles of the switch will close simultaneously. It is therefore necessary to check the time difference between the closing of the two poles of the switch by the method described in section 5.2.3. and correct the result obtained accordingly. Alternatively, the more direct

method given below, suitable for D.C. relays only, may be used.

Connect the contactor coil in series with its control switch across the energising supply. If this supply is greater than 250 volts, connect a potential divider across the switch and connect terminals 1 and E of the Millisecond Stopclock to suitable tapping points on it, ensuring that when the switch is closed a positive-going leading edge is applied to the terminals. Connect terminals 2 and E to the normally open contacts of the relay, and press and release the RESET ZERO lever. When the control switch is closed, the clock will start, and when the relay contacts close it will stop.
For supplies of 6-250 volts, connect terminals 1 and E direct to the operating coil, ensuring that a positive-going voltage is applied to terminal 1 on switching on.

DRO/WT/JV. 25th June, 1958.

MILLISECOND STOPCLOCK TYPE TSA1014/A.

Circuit Reference.

R1	:	3.3 kilohms.	
R2, 3, 4, 5.	:	220 kilohms.	
R6, 7.	:	330 kilohms.	
RV1, 2, 3, 4.	:	1 kilohm potentiometer.	
RV5, 6, 7, 8.	:	5 kilohm potentiometer.	
C1	:	100 microFarad capacitor.	
C2, 3.	:	1000 picoFarad capacitor.	
C4	:	100pF preset capacitor.	
MR1, 2, 3.	:	GEX34 diodes.	
MR4.	:	OA10 diode.	
MR5	:	0.3A bridge rectifier.	
M1, 2, 3, 4.	:	250 micro-ammeters.	
FS1	:	500mA fuse.	
PB1	:	Reset nine button.	
PB2	:	Reset zero button.	
PL1	:	Mains input plug.	
PL2	:	Battery input plug.	
S1	:	Battery/OFF/Mains switch.	1. Battery. 2. Off. 3. Mains.
S2	:	Operation switch.	
E	:	Earth terminal.	
1 and 2.	:	Actuating terminals.	

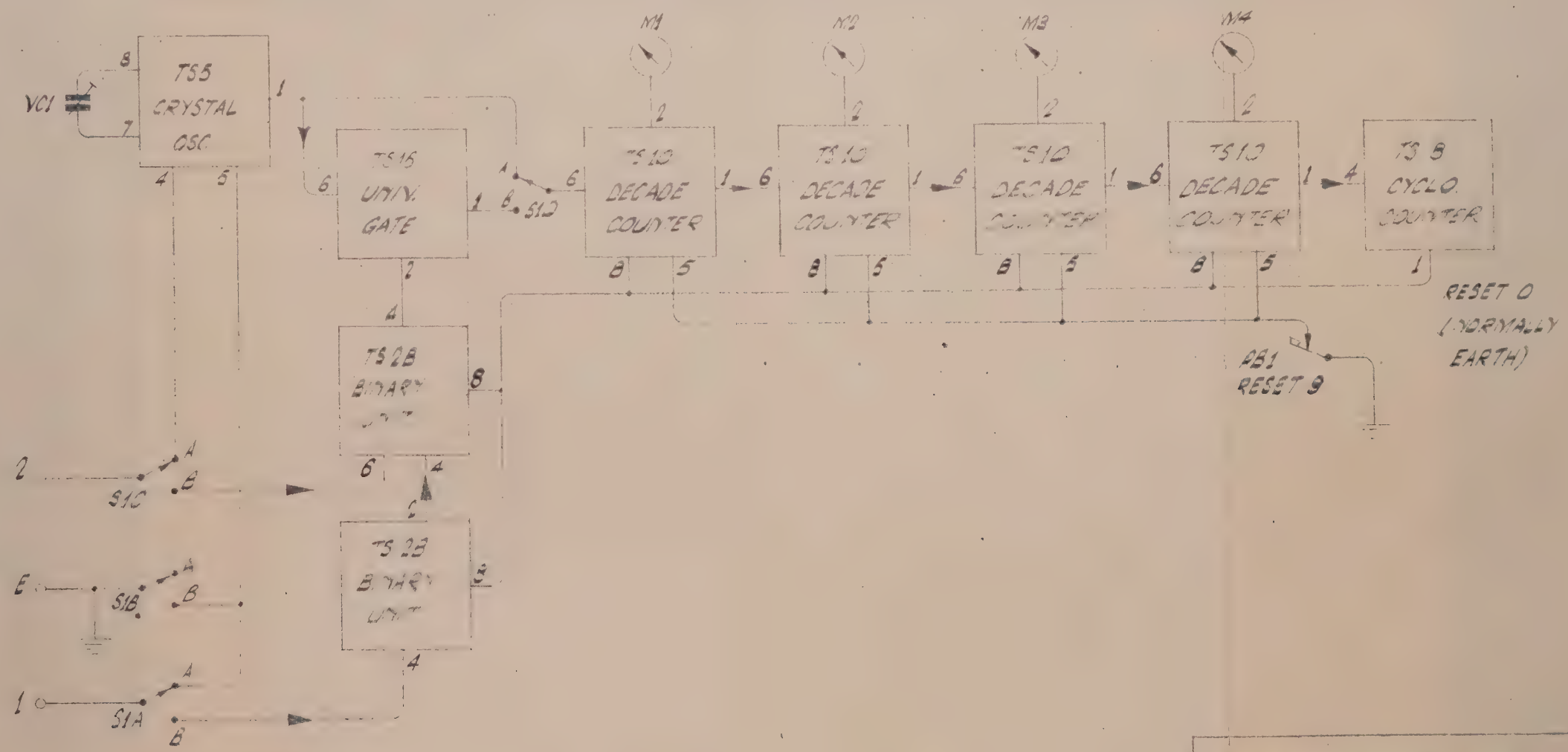

BLOCK DIAGRAM FOR
MILLISECOND STOPCLOCK
TYPE TSA 4

DRAWN	M.A.F.	E632/48
CHECKED	[illegible]	
DATE	26-1-60	

VENNER ELECTRONICS LTD.

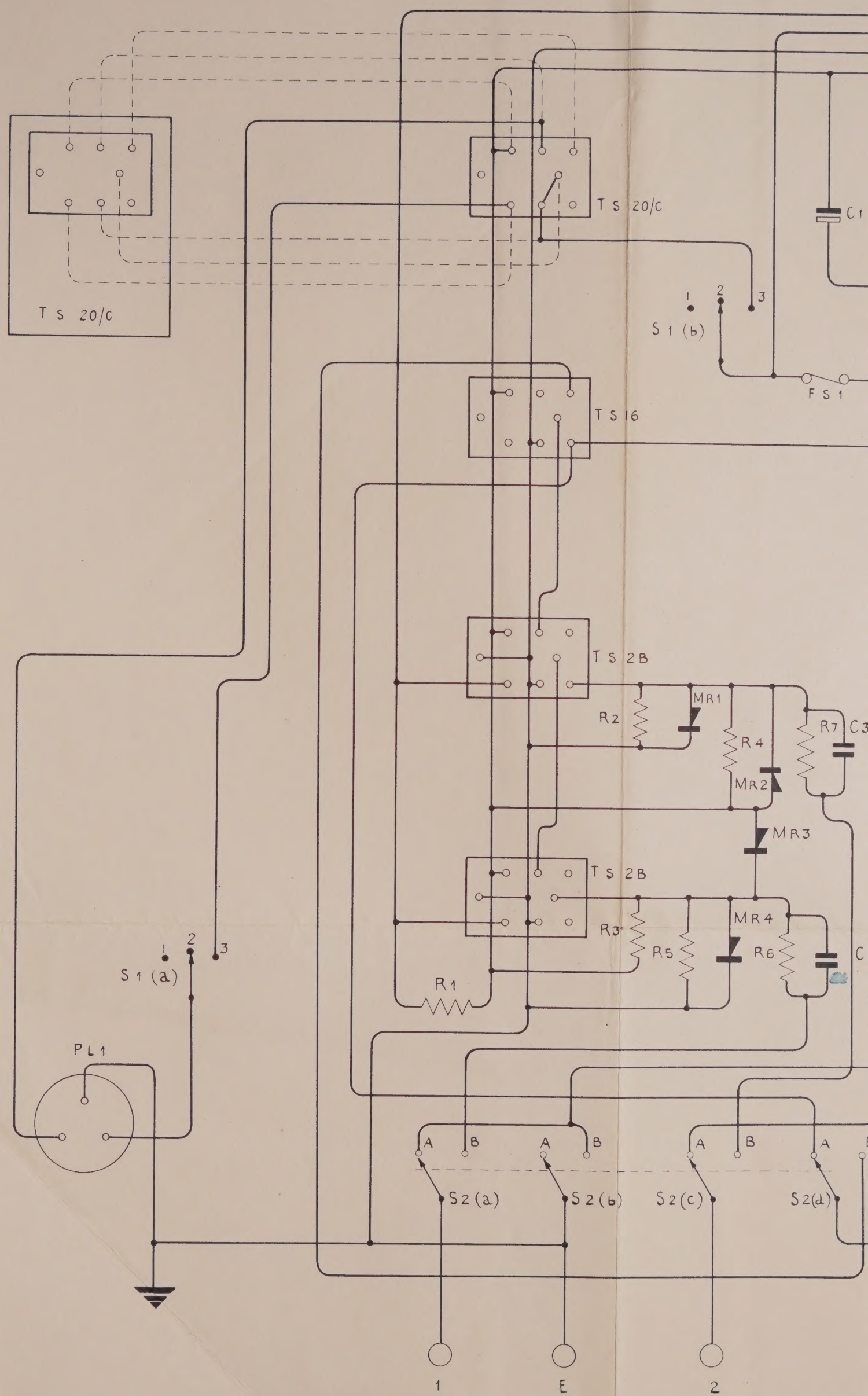
TS 20/C
TS 20/C
C1
1
2
3
S1 (b)
FS1
TS 16
TS 2B
MR1
R2
R4
R7
C3
MR2
MR3
TS 2B
R3
R5
MR4
R6
C
R1
1
2
3
S1 (a)
PL1
A
B
A
B
A
B
A
S2 (a)
S2 (b)
S2 (c)
S2 (d)
1
E
2

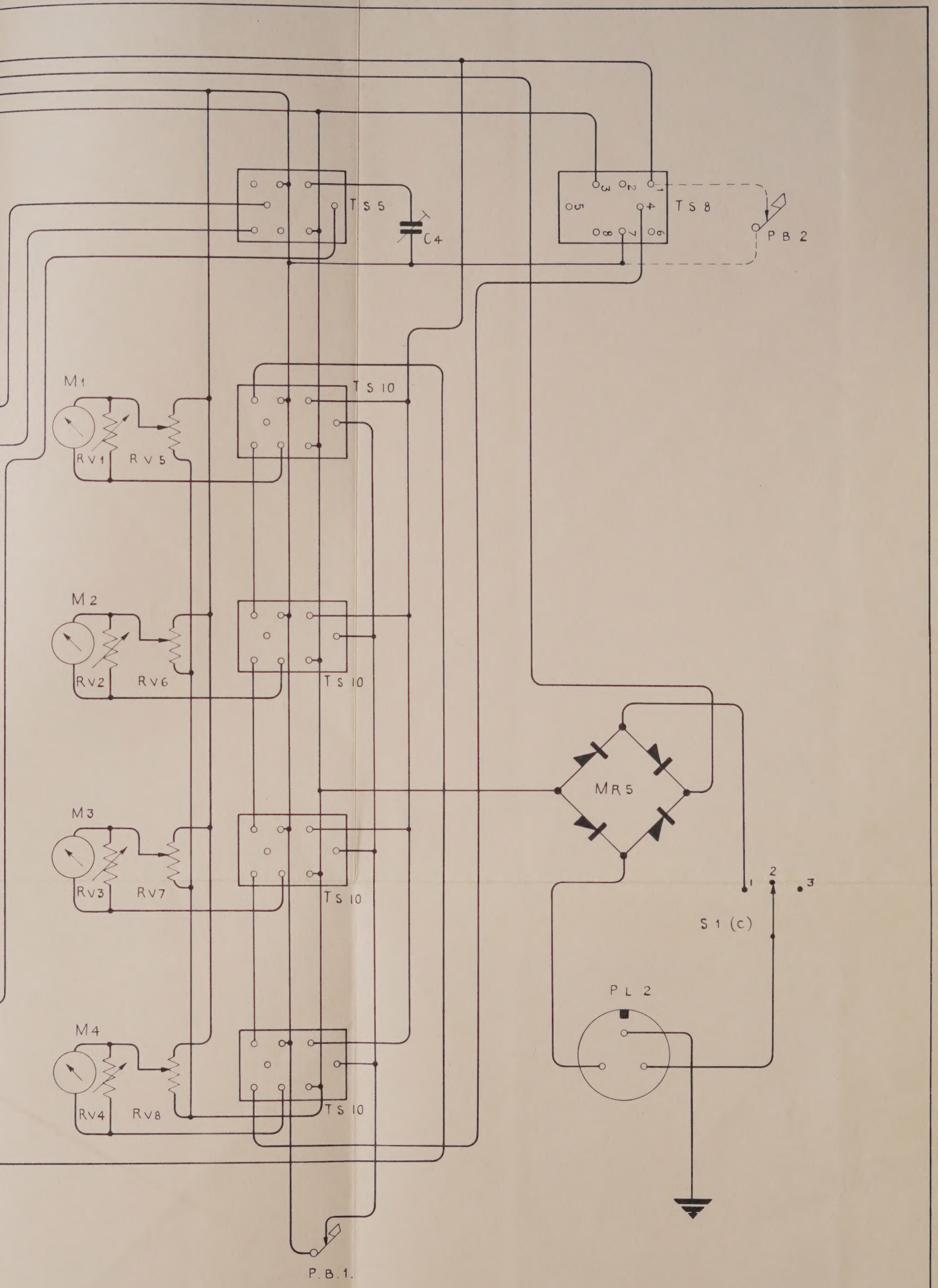

WIRING DIAGRAM FOR
TIME MEASURING EQUIPMENT
TYPE TSA 1014/A.

DRAWN	A.C.P.	S31/8/1
TRACED	M.J.C.	
CHECKED		
DATE	11.5.59	

VENNER LIMITED

www.manualsplus.com
1004085